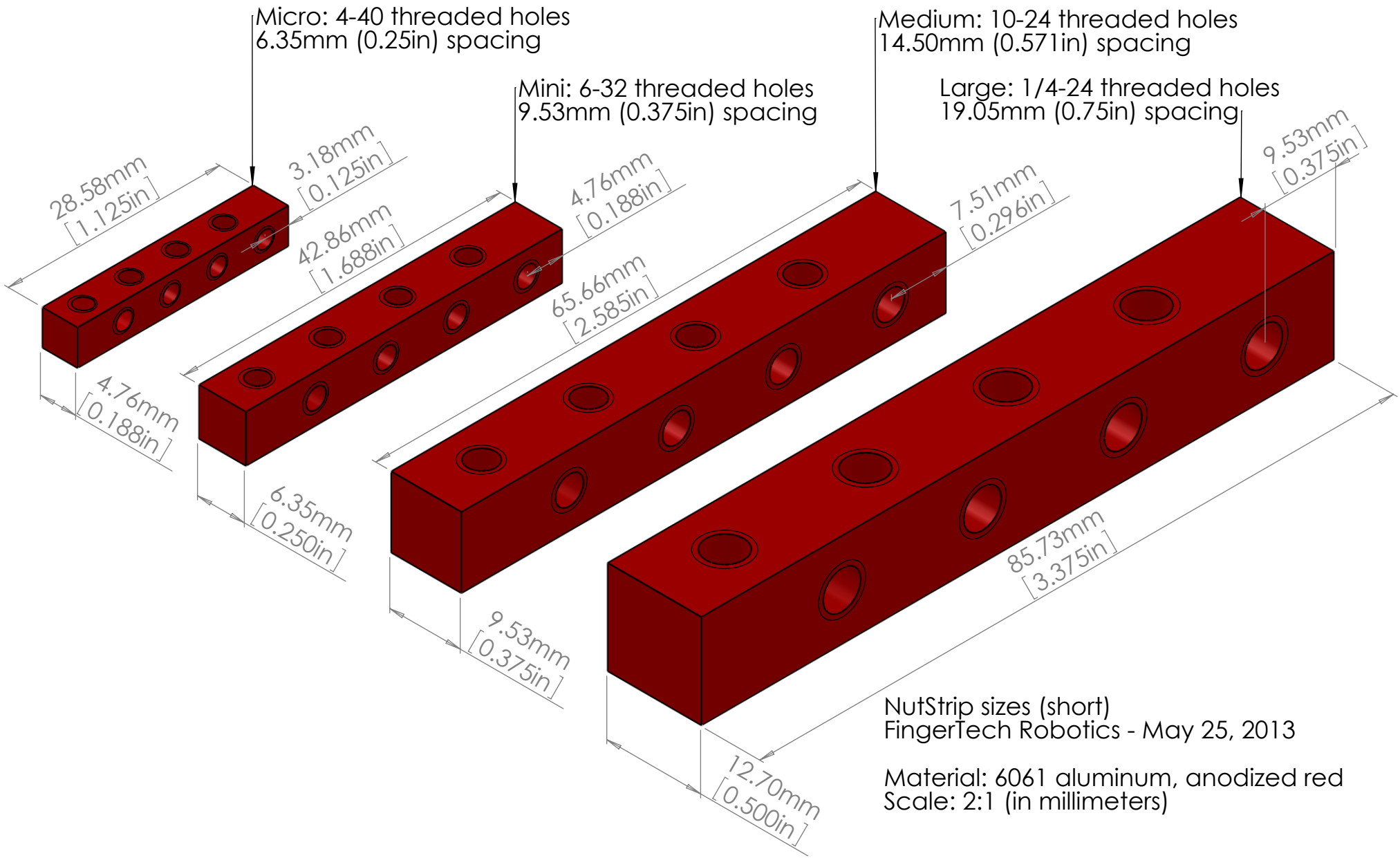

NutStrip sizes (short)
FingerTech Robotics - May 25, 2013

Material: 6061 aluminum, anodized red
Scale: 2:1 (in millimeters)