Instruction Manual

DNO series controllers

DNO-5 and DNO-10

Contents

1. Models

Two models are available, for different current ratings and with different options.

Each is configurable by an on-board link for 12v, 24, or 36v operation.

DNO-5	50 Amps nominal	60A max typical
DNO-10	100 Amps nominal	120A max typical

The nominal current is available for around 1 minute (depends on mounting).

For some applications, e.g. double heading locos, two standard units can be interconnected in tandem via the expansion connector.

48v Operation

Although the DNO is not intended for 48v operation, it will not be harmed by it. Do be aware though that a freshly charged 48v battery can be as high as 56v which may cause the motor to creep even if the speed input is set to zero. Also the controller will not be able to properly regenerate into a fully charged 48v battery so there will be no braking effect.

2. Do's and Don’ts

Do

- Read this manual.
- Make sure your controller is set for the right voltage. See adjustment section.
- Mount the controller properly so it cannot be contaminated by water, dirt or swarf.
- Use fully insulated power connectors.
- Fit a battery fuse or circuit breaker.
- Fit a motor suppression capacitor.
- Twist the motor wires together.
- Twist the battery wires together.
- Insulate all input circuitry so it cannot connect to chassis (battery -ve).

Do not

- Operate the controller with the cover missing. The cover provides support to stop the PCB shorting on the heatsink. Also water and swarf could destroy it.
- Let any metal object contact the circuit board. Even with the battery disconnected the main capacitor can store charge for a long time.
- Drill the heatsink or do any grinding, drilling or filing near the motor or controller**.** Metal particles in the motor or controller can cause failure and will invalidate the guarantee.
- Disconnect the motor leads when the motor is running. The resulting arc may destroy the controller.
- Do any work on the controller with the battery connected.

3. Safety

Passenger carrying vehicles should have some means of disconnecting the battery in an emergency such as a kill switch in the battery wire. This is to guard against a failure in the controller or wiring which, although very unlikely, could cause the motor to run at an uncontrollable top speed.

All passenger carrying vehicles should also be fitted with a mechanical braking system to complement regenerative braking.

Reversing

On the DNO controller series, reversing is normally ‘dual ramp’. This means that, when the reversing switch is operated at speed, the controller slows down under control of the deceleration ramp to zero speed. Only then will the controller reverse and accelerate again under control of the acceleration ramp.

Reversing is done by monitoring the demand speed, after the ramp circuit and not by measuring the motor voltage so that, if the vehicle is reversed when going down a hill, the motor will still be rotating and the vehicle will be travelling when reversing occurs.

Reversing can therefore be accomplished on any hill but it will be more or less violent if the gradient is steep depending on the setting of the ramp controls. The user is best advised therefore not to change direction on steep hills.

Dual Ramp reversing can be deactivated, when the reversing becomes pre-select. To disengage dual ramp, alter the header shown in the layout diagram.

Battery Charging

When the DNO is not operating, the absolute maximum safe voltage is 56v, regardless of the on-board voltage selector. So charging the batteries with the controller connected will cause no problem.

However you should make arrangements such that the vehicle cannot be started up or driven with the charger still connected.

4. Dismantling and Re-assembly

To adjust the controller or to change operating voltage, you will need to remove the cover - which is a tight snap-fit.

Unscrew the four M3 countersunk screws that hold the cover in place. Now lift the tag end of the cover up as shown below. It is a firm fit and needs a firm pull.

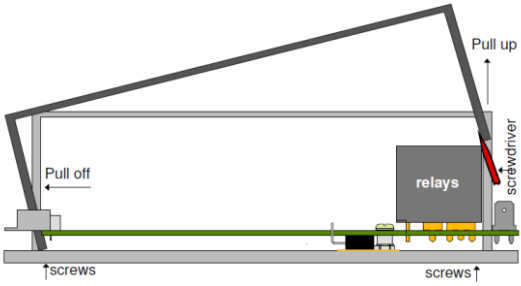

Now pull the cover horizontally off the input connectors.

Refitting the cover is the reverse process.

Do not do this while the battery is connected.

The input connectors are a snug fit in the aperture in the case - do not force them.

You may need to use a small screwdriver blade to “shoehorn” the cover over the relays as shown in the diagram. This is best done at one corner of a relay.

Getting the cover over the relays needs a little force (so be careful not to bend the connectors) as it is a tight fit but once over the relays it snaps into place.

5. Features

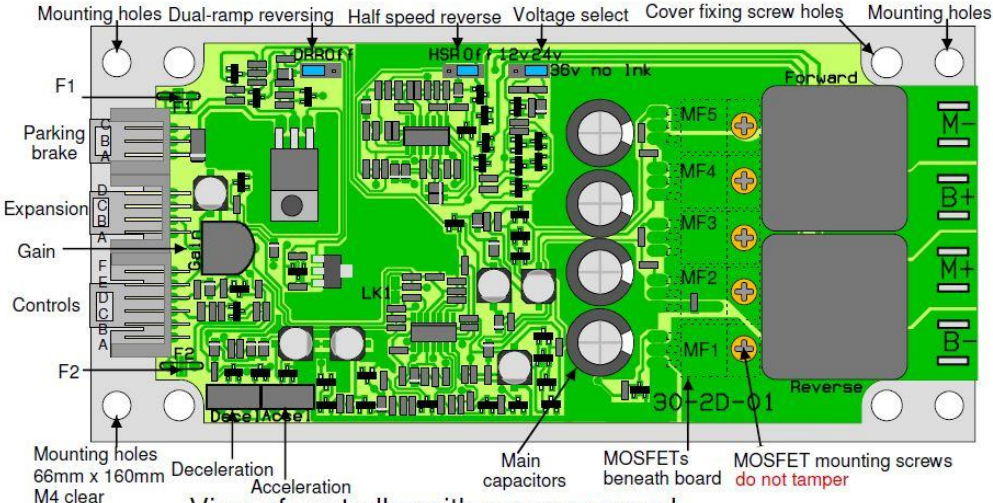

View of controller with cover removed.

The layout diagram above shows the DNO-10 which has five MOSFETs and four main capacitors. The DNO-5 has three MOSFETs (MF2, MF4 not fitted) and two capacitors. Otherwise, the DNO-5 is the same as the DNO-10.

The cover has been removed - the 4 cover fixing screws are accessible from the underside of the aluminium base.

Speed pot and reversing and ignition switch input are via a 6 pin connector.

Also included:

Expansion connector, see page 10. Parking brake connector, see page 8.

Power & Motor connections are by 6.3mm blade connectors on top of the board. Two sets of power connections are provided and can be used for control wires or for extra motor wires.

The DNO is compatible with the older VTX. All connections are interchangeable except for the expansion connector which can only be used to connect two DNO boards. It cannot be used to connect a DNO to a VTX.

The DNO includes an over-current trip. This will trip the controller if the motor current reaches the current limit for a period of about 17 seconds.

The DNO may be used from 12v through 36v by an on-board setting. So the same model may be used with a 12v, 24v or 36v battery. The DNO is also protected against battery reversal.

6. Mounting

The DNO controller should be mounted by the 4 corner holes. It is best mounted with the aluminium base at the bottom as this will give best resistance against water ingress.

In most applications, high current will only drawn for short periods so little heating will be experienced. However, the DNO's base heatsink should be mounted on additional metal if high current is expected: this will help remove any heat generated.

Keep the plastic cover in place when operating the controller - this will protect against most likely accidents.

If, when setting the controller up, you have to operate with the cover removed, be extremely careful that no foreign objects (swarf, wires, washers etc) contact any of the board.

If you need to remove the heatsink from the DNO e.g. to drill extra mounting holes, the take careful note of how the black insulating washers and white spacers on the mosfet mounting screws are arranged.

7. Power Connections

Battery wiring

Battery connections to the controller are shown in the diagram in section 7, use only good quality battery connectors.

Note that, if the battery is disconnected for a minute of more, when the battery is re-connected, it is normal for there to be a noticeable spark as the main capacitors charge.

The controller is protected against reversed battery, but will not work.

Battery Fuse

We strongly recommend fitting a suitable fuse or circuit breaker in the battery circuit. This will protect against some system faults and may prevent the controller being destroyed. It is vital when double heading. A sensible value for this fuse is the same as the motor current. Use the smallest value fuse which does not cause nuisance blowing: if the controller is giving more current than it can handle it will simply trip out or get hot.

Battery isolator

We also recommend fitting a battery isolator switch which allows disconnection of the battery positive line, either for emergency use or to reduce current drain whilst stored.

Wire size

Use heavy duty wire for the battery and make them as short as possible. This also applies to the battery linking wire on 24v systems. 4mm (12awg) wire is ‘officially’ rated to handle 41 amps continuously. At 100 amps it gets too hot to touch within about 60 seconds, so it is fairly well matched to the DNO 5. 6.0mm² (10awg) is advised for the DNO 10. Thicker wire will cause no problems. Use of wire that is too long and / or too thin will cause loss of power, but more importantly will cause the main capacitors to overheat and shorten their life.

We recommend that the battery wires are twisted together as far as possible to reduce electrical interference.

Crimp Contacts

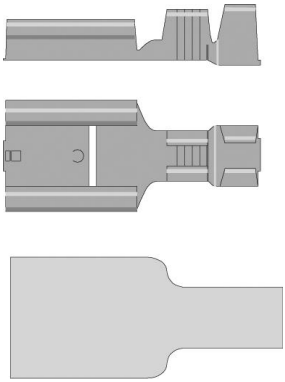

It is **VERY IMPORTANT** that you use fully insulated crimps: the power connections are close to the board. Un-insulated crimps may short out and destroy the controller. Best of all use ‘F type’ crimps with vinyl covers shown in the drawing.

4QD can supply these pre-crimped - they require a special crimp tool.

Also be aware that the main capacitor can store charge for a long time (several minutes) so the potential for damage is there after the battery has been connected.

Motor wiring

This is not so critical as battery wiring: too long and / or too thin wire will cause a loss of maximum current, will get hot and will waste battery power but will not damage the controller. However, wire which is too thick will do no harm either so we recommend the same wire for the motor as for the battery.

We recommend that the motor wires are twisted together as far as possible to reduce electrical interference.

Battery condition meter

Pins B and F (white and green on the diagram) can be used to connect a battery condition meter that comes on with the ignition.

8. Control Connections

Simple Wiring

The diagram below shows a simple way of connecting the DNO. On the 6 way multi-core control wire, yellow is internally connected to battery +ve. White and black may also be battery +ve (depending on the control switches). Green is battery -ve and blue and red are the control pot. Make sure the green wire to the pot does not connect to chassis as this can cause problems.

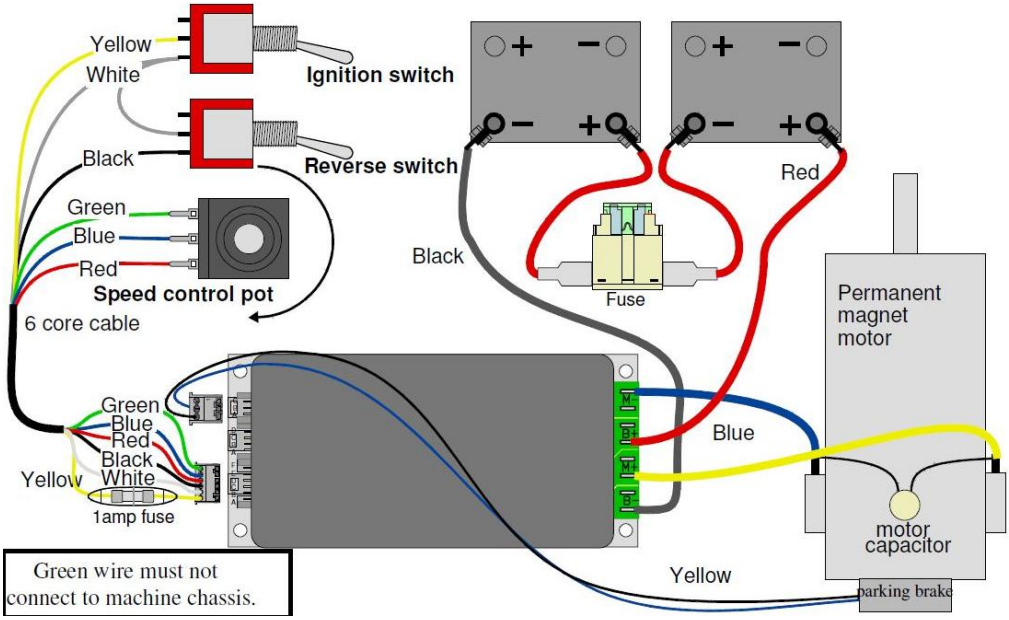

Control Fuse

We recommend fitting a 1A fuse somewhere in the yellow wire. If this is omitted, a mistake in the wiring can blow fuse track F1 on the controller.

6 Way Connector

The mating connector supplied is suitable only for the correct size of wire.

Acceptable wire sizes are:

… 7 stranded 0.22-0.25mm²

… Equivalent 24 AWG (7/32 AWG)

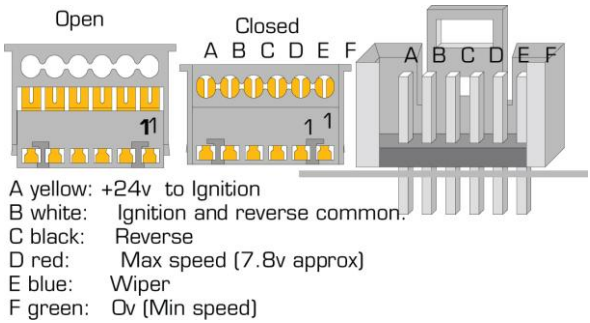

It is an Insulation Displacement Connector (IDC) which 4QD have chosen because it is so very easy to use and very dependable. - but only with the correct wire.

Do not strip the insulation from the wires, simply push them into the top part of the open connector and squeeze it closed in a vice or with suitable parallel action pliers. As you do this the tines of the contacts bite through the insulation to make contact with the conductors.

Make sure the ends of the wires are flush with the back of the connector or it will not fit the socket properly. Cut off any protruding ends.

Wire which is too thin will not make contact. Wire which is too thick will damage the tines.

Do not use single strand (telephone) wire: it will make unreliable contact and easily breaks.

You can re-open a closed connector by gently moving the tabs at the sides of the top cover outwards to disengage the latches while lifting the cover slightly, one side at a time.

Reverse Polarity Protection

This is integral to the controller and is in the battery negative connection. One consequence of this is that the green wire to pot zero is not and must not be directly connected to battery -ve. If such a short to chassis occurs then the reverse polarity protection will not work, and the on-board fuse F2 will blow.

Motor Capacitor

Fit a motor suppression capacitor. A 10n 100v ceramic capacitor as close to the motor brushes as possible will increase reliability.

Push Buttons

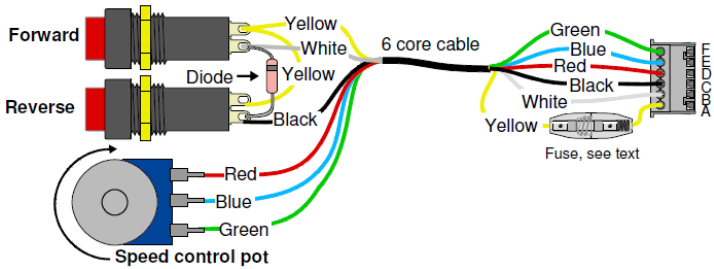

Instead of two switches (ignition and forward / reverse) you may use two push-and hold buttons. Wiring is shown below: note the extra diode (any small signal diode, e.g. 1N4148) which is needed to make reverse work. The diode's cathode (the end with the band) should be connected to white.

9. Inputs

Speed pot

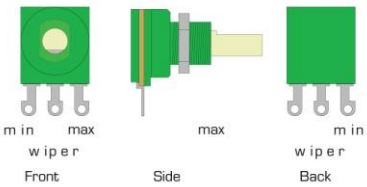

We suggest a 10K linear pot, although other values from 2K to 20K, linear or log, can be used.

The gain adjustment on the controller alters the amount of pot rotation required before full speed is reached.

The simplest speed control is an ordinary rotary pot: this won't give any 'dead man' control as the pot won't return to zero when it is released. 4QD can supply a spring return to zero hand control.

Alternatively 4QD can supply a plunger operated pot (linear position sensor), suitable for incorporating into a foot pedal.

On/Off switch

Circuitry in the controller switches it off (zero current consumption) unless there is a voltage on pin B.

With the ignition off, or even with the battery disconnected, the relays short out the motor so free- wheeling is not possible. To freewheel properly the motor should be disconnected.

Reversing switch

Reversing switch connections are shown in the diagram in section 7. When the switch is open, forward is selected. Reverse is selected by closing the switch.

Reverse threshold

If you are reversing the controller from, for instance, a microcontroller, the threshold is around 5v. A voltage above this selects reverse, below the threshold selects forward.

Use as voltage follower

Instead of a pot, the input may be fed from a variable voltage. 0v (common) to pin F, signal input (+ve) to pin E. A resistor (10k) should be connected from pin D to pin F to over-ride the internal pot fault detector circuit.

Zero speed will be for zero voltage input and full speed voltage may be adjusted (by the gain control) to be from 3v to above 20v. Input impedance is 100K.

If pin D is shorted to pin E (and the 10K present) the gain control may be used as a pre-set speed control.

Ignition and reverse inputs are both high impedance (voltage controlled). High activates. Thresholds are around 5v and 7v.

Pi / Arduino

The DNO is easy to drive from a Raspberry Pi or Arduino using the PWM output. Full details of how to do this are in the knowledgebase section of our website.

10. Braking

Regenerative Braking

Regenerative motor braking is integral to the DNO controllers. When the demand speed is reduced below the actual motor speed, the controller starts braking, returning as much of the braking energy as possible back into the battery. The rate at which the braking acts is adjusted by means of the deceleration adjustment.

Regenerative braking does not work well at very slow speeds because it relies on the motor turning to provide braking energy. If the motor is only turning slowly then it cannot give a lot of braking, so a vehicle will creep if parked on a hill. To stop this you can get motors fitted with an electromagnetically operated parking brake. When power is applied to this, the brake is removed and when power is removed the brake is applied by a spring.

Parking Brake

Some motors are fitted with a separate solenoid released parking brake. The DNO controller has a circuit to drive such a parking brake brake: battery power is applied to the solenoid as demand speed is increased above zero and when the demand speed returns to zero, power is removed.

Parking brake is via the 3 pin connector, shown on the diagram ‘Features’. Wiring is as the diagram below.

Pin A is battery +ve.

Pin C is 0v which can be used as you wish or can be used for an off - auto - on switch as below.

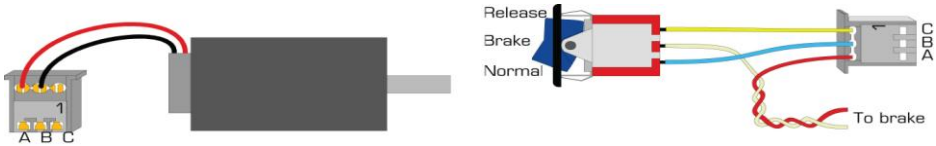

11. Adjustments

Pinstrip Adustments

There are 3 adjustments which are made by unplugging a shorting link from a pinstrip and re- positioning it. These are identified in the layout diagram.

Voltage Adjustment

Three voltage ranges are selectable. Default operation is for 24v. For allowable voltage ranges, see the specification page.

12v: shorting link to left

24v: shorting link to right

36v: shorting link removed.

Dual Ramp Reversing (DRR)

DRR is the factory default. DRR means that, if the vehicle is reversed at speed, it automatically slows down under control of the deceleration ramp then reverses and speeds up under control of the acceleration ramp.

If DRR is switched off, reversing becomes ‘Pre- Select’. Changing the reversing switch does nothing immediately: the controller will start off in the pre- selected direction after speed is reduced to zero.

Half Speed Reverse (HSR)

Factory default: HSR is selected. If you want reverse to be the same as forward speed, move the link.

Trim Adjustments

There are 3 adjustments which are made by adjusting rotary trim controls. These are identified in the layout diagram.

Gain

Set this so that, at maximum required pot setting, the controller just reaches full speed: this is easiest to do with the motor unloaded. Set the speed pot to your required maximum point then, listening to the motor, adjust the preset. It is usually quite easy to tell when the motor stops accelerating.

Maximum setting of the gain preset will give full output for about 3v input. Gain setting is slightly dependent on the setting of the ramps.

Ramps

The DNO series controllers incorporate linear ramps to control the acceleration and deceleration rates. These are user adjustable and you should adjust them to best suit your application.

Warning: setting the ramp speed to maximum can cause the relays to arc if reverse is selected whilst the motor is still going forwards [and vice versa]. This will shorten their life.

Acceleration Ramp

This is labelled as ‘ACC’ on the diagram: it is present to make the vehicle accelerate smoothly when the speed pot is increased suddenly, so as to avoid sudden surges and shocks to mechanical components. As supplied it is normally at half setting so that the motor takes about 2 seconds to accelerate. Adjust it as you require to give smooth acceleration.

Clockwise decreases acceleration (increases time to full speed), anticlockwise increases acceleration (decreases time to full speed). If the acceleration is set too high (clockwise) the acceleration may be limited by the current limit, which does no harm but means that acceleration is not being controlled properly, so will be dependent on motor load.

Deceleration Ramp

This is shown as ‘DEC’ on the diagram: it is present to make the vehicle decelerate smoothly when the speed pot is reduced suddenly. As supplied it is normally at half setting (about 3 seconds). Adjust it as you require to give smooth deceleration. You will usually find you require a lower setting (more anticlockwise) for DEC than for ACC. If the Decel time is set too low (anticlockwise) then the relays will drop out (and short out the motor) before regenerative braking has finished, giving a jerk before the vehicle stops completely. This will also shorten the life of the relays.

12. Heatsinking and Current Trip

The current limiting used in 4QD’s controllers senses the MOSFET temperature and automatically adjusts as the MOSFETs heat up. However, running the controllers at full current will cause speedy heating so the allowable continuous current may then depend on the external heatsinking.

Be aware of the temperature in the aluminium base: it won’t hurt the controller if this gets to 100°C but this is dangerously hot to the touch. If it gets this hot then the controller needs additional heatsinking or cooling.

The DNO incorporates a trip circuit which switches the controller off if it is run at currents high enough to operate the internal current limit. This takes about 17 seconds to operate. If this trip operates you are likely also to be overheating the controller and you need a bigger controller.

To reset the controller if the current limit trip operates, switch off the ignition switch and wait at least 1 minute before switching on again.

13. Expansion Connector

This 4 way connector is for ganging two DNO controllers together, either for a two motor vehicle or as when double heading a loco.

When two standard controllers are connected together via the expansion connectors, one is used as the master and the second becomes the slave. The master should be connected normally and controls one motor and its parking brake (if fitted).

The slave controller needs only battery connections and connections to the second motor. It does not require any controls to be connected to the standard 6 pin input connector: if any controls are fitted to the slave, then a ‘voting’ system operates: If either ignition is on, both controllers operate.

If reverse is selected on one, both will reverse.

If speed is non-zero on both controllers, then the fastest selected speed will control both.

So to avoid confusion, simply plug **nothing** into the 6 way input connector on the slave.

The slave is to be connected to the master DNO via a 4 way cable between the two expansion connectors wired as the diagram.

It is important that the master and slave either work off the same battery or the two batteries should be connected in parallel. This could prevent severe damage to the slave if its battery fails or discharges before the master’s.

When connecting up the slave link, both systems should be in an already operating state, i.e. with batteries connected. Never connect the slave connection before connecting the batteries.

This slaving system can be used as a permanent controller for a two motor vehicle, when the two motors will perform identically but with independent current limits. If two motors are used off one single 200 amp controller, then the full 200 amps current would available to drive either motor in stall conditions. With the DNO system, each motor may only draw up to 100 amps, limited by its own controller. The system therefore offers more protection to the motors. Also, if one motor gets disconnected the second motor will still be protected. Lastly, if there is a failure in one controller the chances are that the vehicle may still be operable on the other controller, providing an emergency ‘get you home’ service.

Pin functions

Pin	Colour	Function
A	Red	ignition
B	Yellow	direction
C	Blue	speed
D	Green	0v

14. Fault Finding

Most faults are caused by external wiring. The majority of controllers returned have no fault, or simply a fuse track has been blown by a wiring fault (see fuse section).

Controller is dead

If the controller doesn't work at all check the following:

Pot fault detection

The controller has protection against a broken wire to the pot: If there is a broken wire, or if the pot resistance is too high (above about 25K) the controller will be dead.

Fuses

Check the fuses, F1 and F2.

Check the voltage on pin D of the input connector.

This should be about 7.5v when ignition is on.

No reverse

If the controller won't reverse there are two distinct possibilities:

1 The motor still goes forward when reverse is selected.

2 The motor is dead when reverse is selected

The first fault is likely to be a wiring fault: the reverse signal is not getting to the controller. Measure the voltage on the black wire to pin C (measure with respect to battery –ve). If this is low (below about 6v) the controller will go forward. When high (above about 6v) the controller will reverse. The reversing switch connects this pin to battery positive to apply a voltage to reverse it.

The second fault is usually in the controller.

There are more fault-finding hints in the trouble shooting section of our website.

15. Fuses

Two fuses are present to limit damage to the controller in the event of a major wiring problem to the control input.

These ‘fuses’ are zig-zag sections of track shown to the right.

They are situated adjacent to the input connectors.

If a fuse is blown, solder a self-resetting fuse FSR-090 (see website) in the holes provided. Or you can use 1A fuse wire or a fine piece of wire e.g a single strand from 7/0.2 cable.

F1 is in the connection from B+ to pins A of Parking brake and Input connectors. It can be blown by a wiring fault to earth on either set of wiring.

F2 is in the B- connection to all 3 connectors. It can be blown by the same fault that can blow F1, but it can also be blown by a fault from either input earth pin direct to the battery negative.

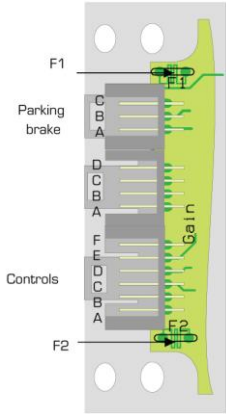

16. Service

In the event of any problem please contact us before returning a suspect controller.

Please include a completed returns form with the returned controller [see website]. Details of service charges are on the website.

Warranty

All our controllers have a warranty against defective manufacturing for 12 months from the date of shipment. The warranty doesn’t cover damage caused by incorrect installation.

17. Specifications

Operating voltages		User selectable on board
12v setting	9v min 18v max	
24v setting	15v min 30v max	Factory default setting
36v setting	25v min 56v max	See notes in section 1 for 48V
Supply current	25mA	at zero speed
Reverse battery protection	60v max	
Output current		
DNO-5	40A approx 1 minute 30A continuous	Continuous current will depend on mounting/cooling
DNO-10	75A approx 1 minute 60A continuous	
Current limit		Depends on motor
DNO-5	approx 50A	
DNO-10	approx 100A	
Overcurrent trip	17 seconds in current limit	
Switching frequency	20kHz	Approximately
Size	170mm x 80mm x 49mm	
Weight	390g	
Input	2k to 20k pot.	
Pot fault detect	greater than 25K	
Input voltage	3v to 20v for full speed	Adjustable
Acceleration time	100mSec to 5 Sec	Adjustable
Deceleration time	100mSec to 5 Sec	Adjustable
Ignition input threshold	8v into 50k	Approximately
Reverse input threshold	5v into 10k	Approximately
Parking brake	1 amp max.	
Mounting holes	4 off clear	66mm width X 170mm length