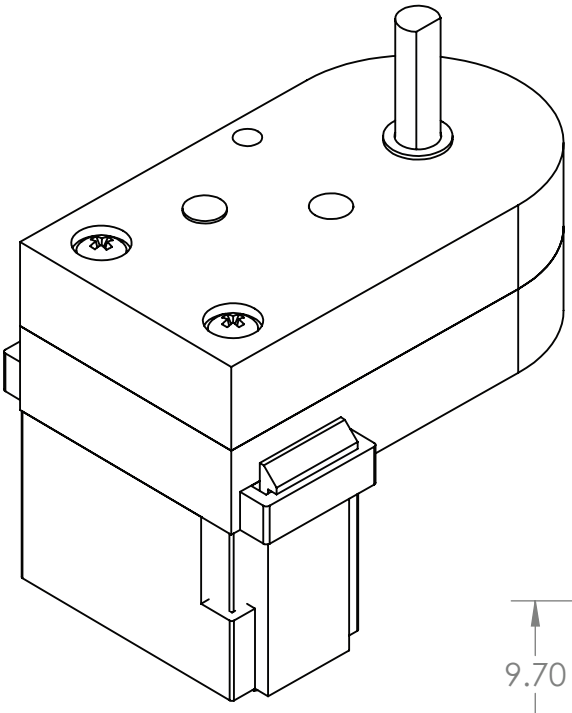

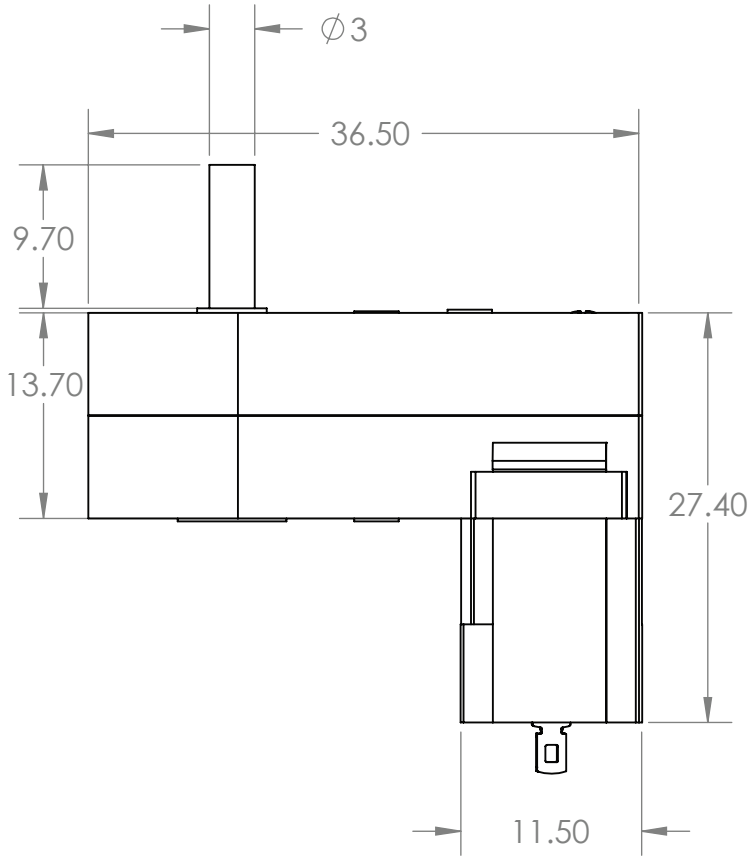
∅3
36.50
9.70
13.70
27.40
11.50

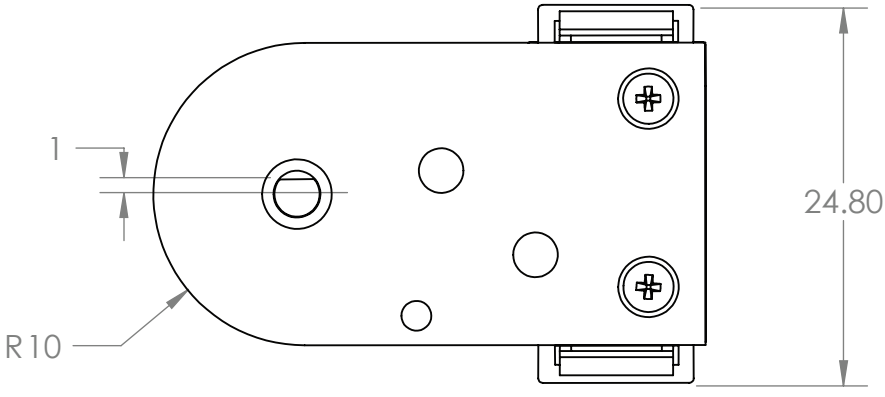
1
24.80
R10